NSCOM01

Modern Transport Protocols: QUIC

Instructor: Dr. Marnel Peradilla

TCP FAIRNESS

- **Fairness Goal: if *K* TCP sessions share same bottleneck link of bandwidth *R*, each should have an average rate of *R/K*.**

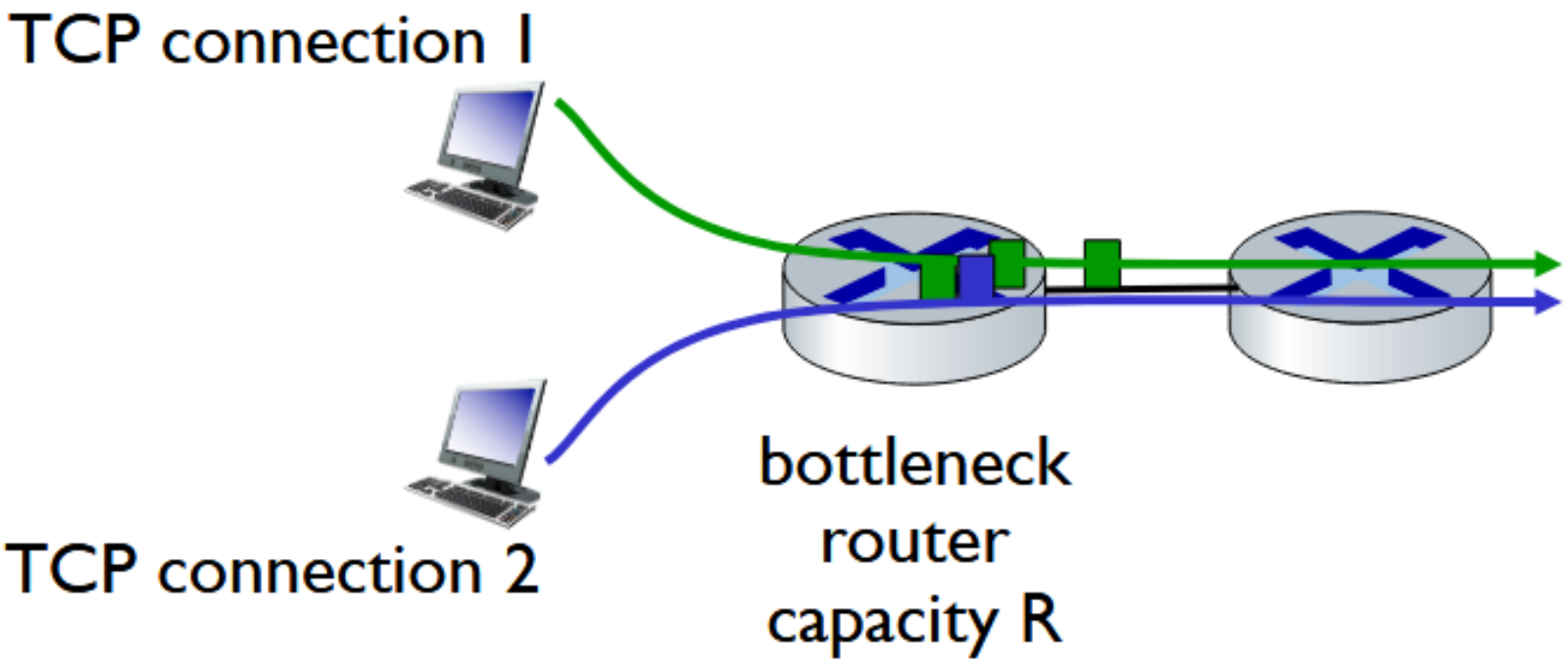

Q: is TCP Fair?

- **Example: two competing TCP sessions:**
  - Additive increase gives slop of I, as throughput increases
  - Multiplicative decrease decreases throughput proportionally

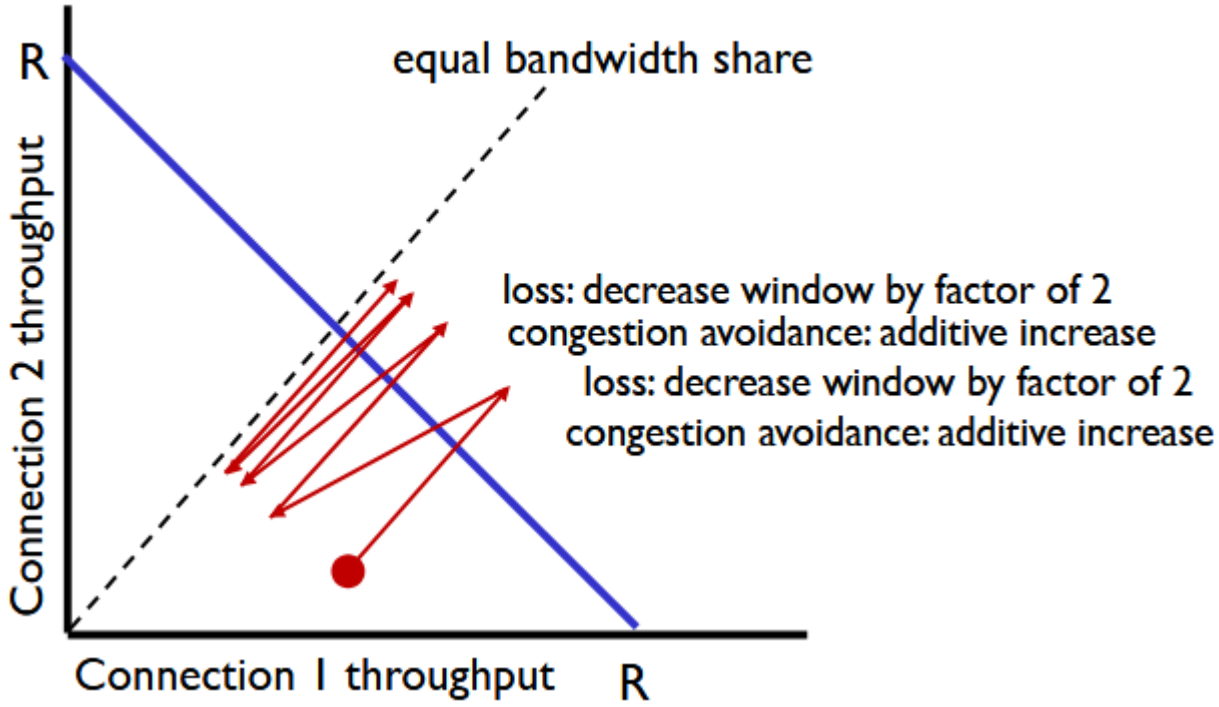

Is TCP fair?

A: Yes, under idealized assumptions:

- same RTT
- fixed number of sessions only in congestion avoidance

Fairness:must all network apps be “fair”?

Fairness and UDP

- **multimedia apps often do not use TCP**
  - do not want rate throttled by congestion control
- **instead use UDP:**
  - send audio/video at constant rate, tolerate packet los

There is NO “Internet police” policing fairshare

Fairness, parallel TCP connections

- **application can open multiple parallel connections between two**
- **web browsers do this , e.g., link of rate R with 9 existing connections:**
  - New app asks for I TCP, gets rate R/10
  - New app asks II TCPs, gets R/2

TRANSITION TO QUIC

- **TCP fairness limitations:**
  - unfair vs UDP
  - unfair with parallel connections
  - inefficient for modern web

- **QUIC rethinks transport**
  - Built over UDP
  - Implements its own congestion control
  - Supports multiplexing without multiple connections

QUIC: Quick UDP Internet Connections

❑ application-layer protocol, on top of UDP

- increase performance of HTTP
- deployed on many Google servers, apps (Chrome, mobile YouTube app)

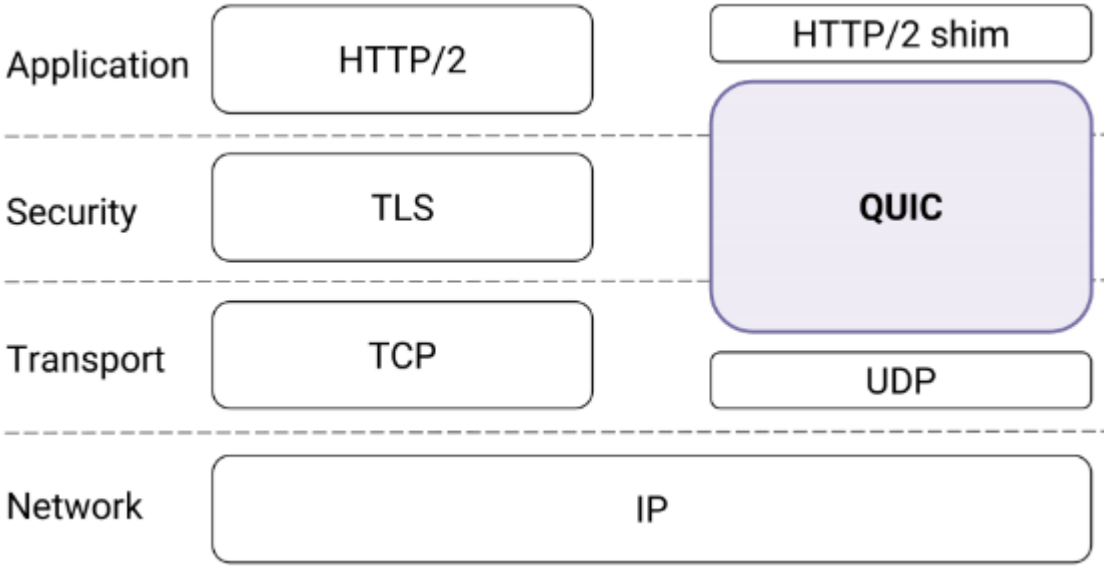

❑ Features

- Stream multiplexing
- UDP resilience to loss
- FEC resilience to loss
- TLS-like security
- Low cos, 0-RTT start
- Pluggable congestion control

Why UDP?

- **UDP allows the user-level application to control each packet.**
- **QUIC implements reliable transport in an application library, rather than letting the OS's TCP library handle it.**
  - QUIC implements retransmission, handshakes, pacing, etc. on top of UDP.
- **This allows Google's Chrome browser to include QUIC without modifying the underlying OS.**
- **Ideally, it would make sense for QUIC to be implemented as an alternative to UDP and TCP, directly on top of the IP layer.**
  - However, existing routers, firewalls, NATs don't know about QUIC.
  - Lesson from IPv6: incompatibility with old hardware will block adoption

TWO HANDSHAKES

- TLS cannot start its key exchange until after the TCP handshake
- The speed of light is a hard limitation, so latency will become the dominant factor influencing performance of future networks.

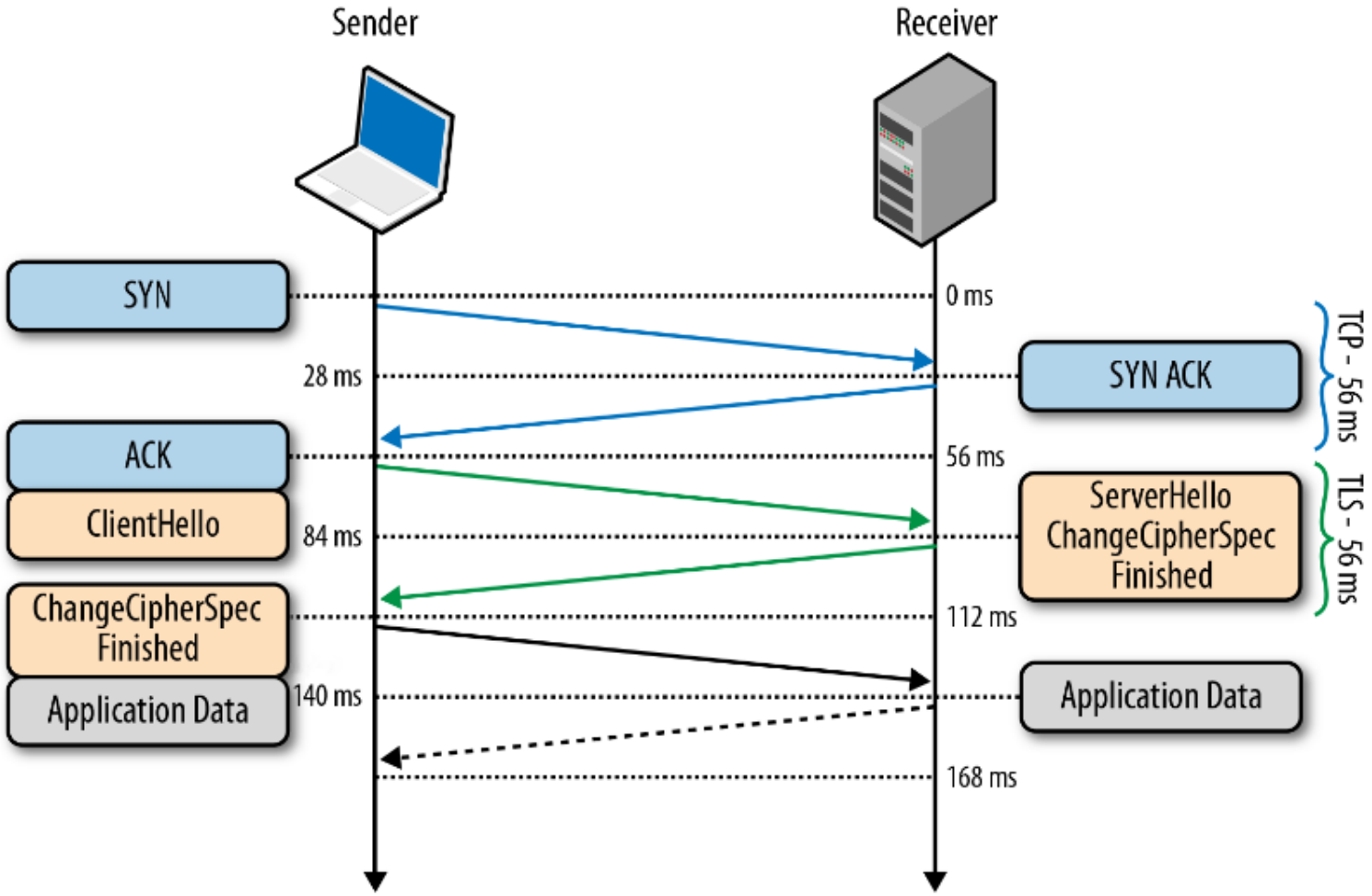

0-RTT CONNECTION ESTABLISHMENT

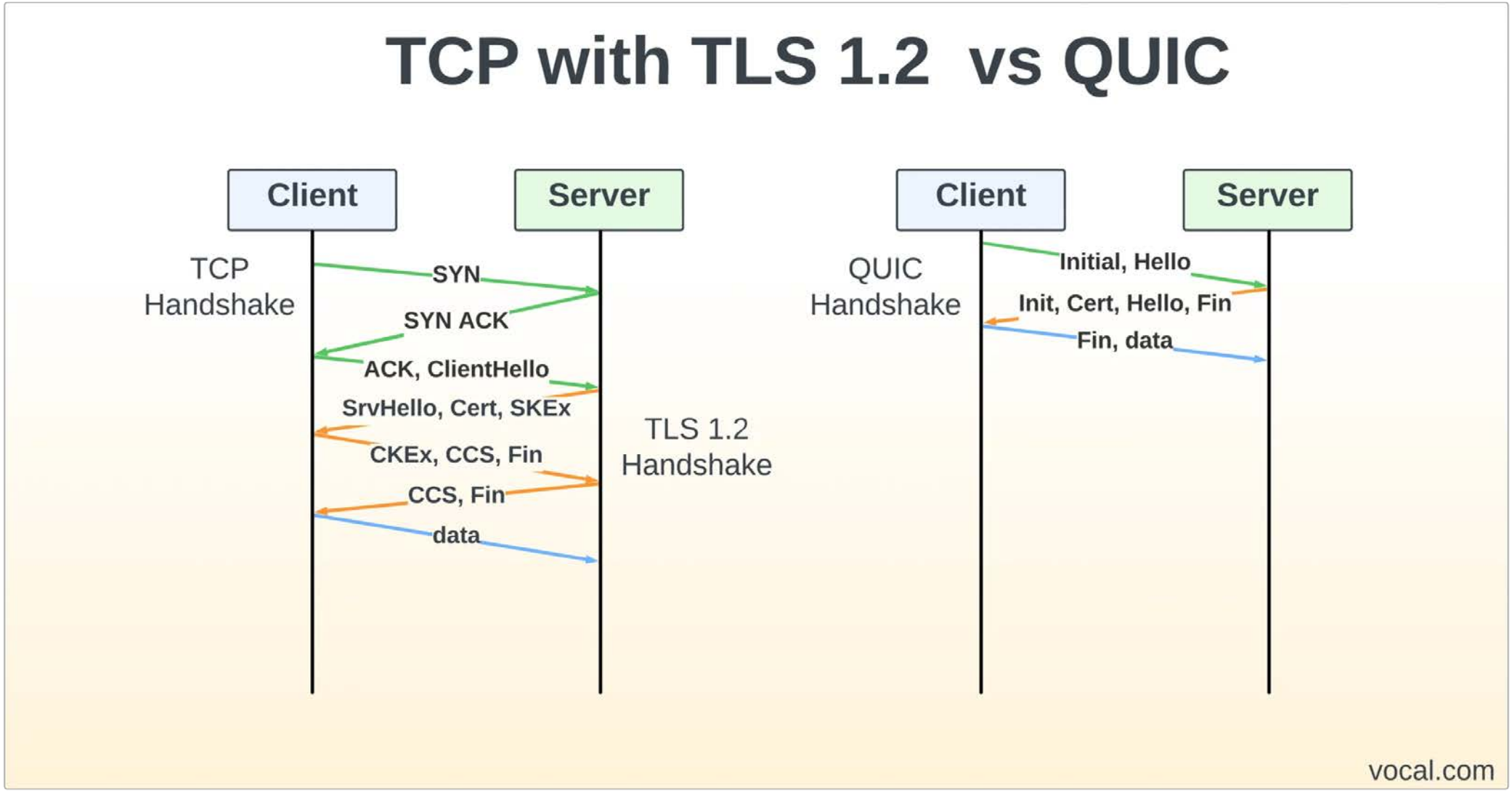

First-ever connection - 1 RTT

- **No cached information available**
- **First CHLO is inchoate (empty)**
  - Simply includes version and server name
- **Server responds with REJ**
  - Includes server config, certs, etc
  - Allows client to make forward progress
- **Second CHLO is complete**
  - Followed by initially encrypted request data
- **Server responds with SHLO**
  - Followed immediately by forward-secure encrypted response data

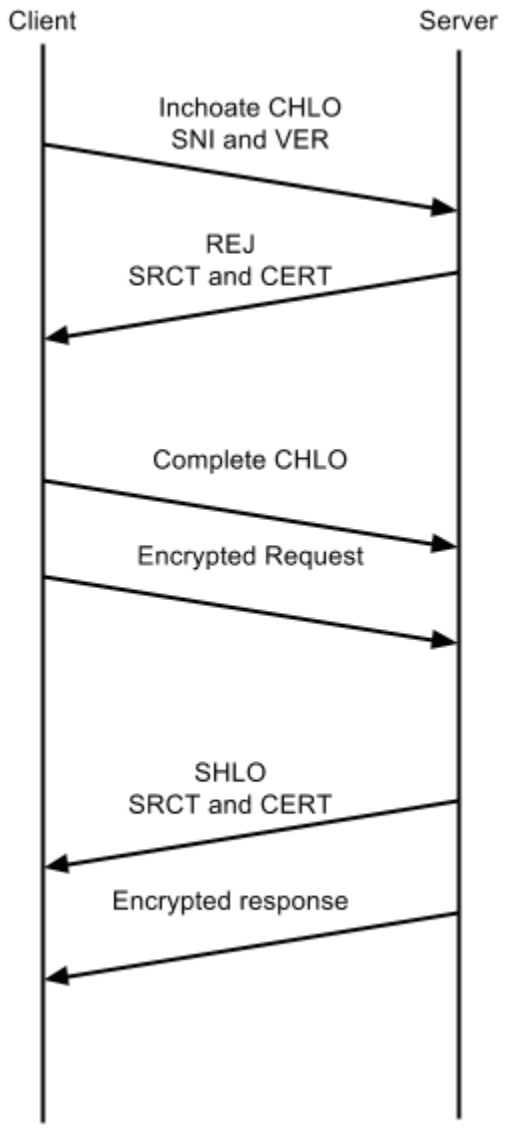

Subsequent connections - 0 RTT

- **First CHLO is complete**
  - Based on information from previous connection
  - Followed by initially encrypted data.
- **Server responds with SHLO**
  - Followed immediately by forward-secure encrypted data

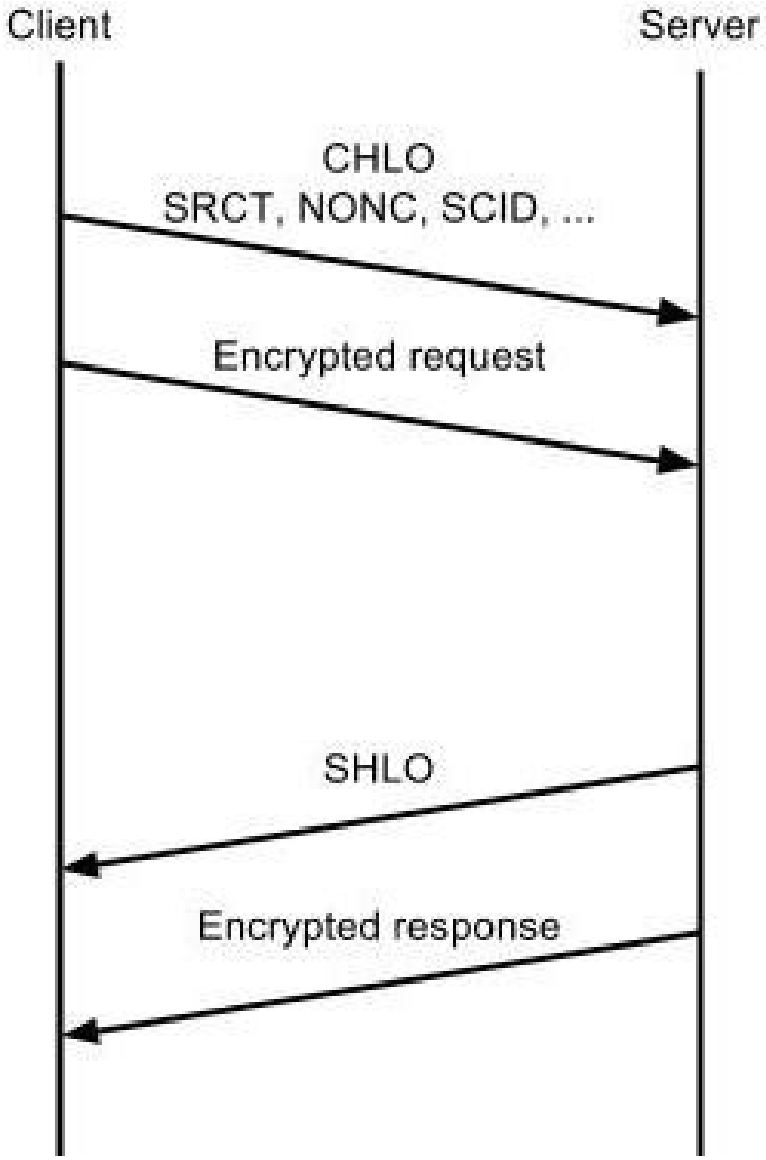

ALWAYS ENCRYPTED

- **Comparable to TLS**
  - Perfect forward secrecy, with more efficient handshake
- **IP spoofing protection**
  - Signed proof of address
- **Inspired TLS 1.3's 0-RTT handshake**
  - Plan to adopt TLS 1.3 when complete

CONNECTION ESTABLISHMENT

- **Connection identified by Connection ID**
  - As opposed to common 5-tuple
  - 64 bits
  - Chosen randomly by the client
  - Enables connection mobility across IP, port

CONGESTION CONTROL & RELIABILITY

- **QUIC builds on decades of experience with TCP**
- **Incorporates TCP best practices**
  - TCP Cubic - fair with TCP
  - FACK, TLP, F-RTO, Early Retransmit...
- **More flexibility going forward**
  - Improved congestion feedback, control over acking
- **Better signaling than TCP**

BETTER SIGNALING THAN TCP

- **Retransmitted packets consume new sequence number**
  - No retransmission ambiguity
  - Prevents loss of retransmission from causing RTO
- **More verbose ACK**
  - TCP supports up to 3 SACK ranges
  - QUIC supports up to 256 NACK ranges
  - Per-packet receive times, even with delayed ACKs
- **ACK packets consume a sequence number**

HOW QUICK IS QUIC&

- **Controlled Experiments**
- **Client Side**
  - Latency, Bandwidth, Quality of Experience, Errors
- **Server Side**
  - Latency, Bandwidth, QUIC Success Rate
- **Fine Grained Analysis**
  - By ASN, Server, OS, Version

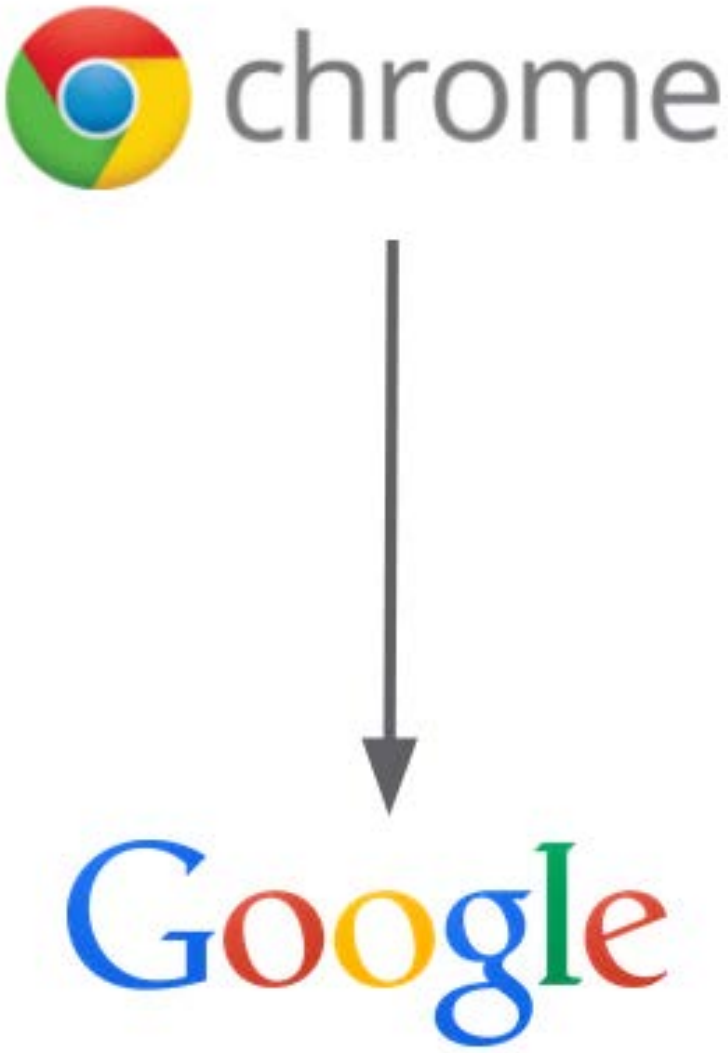

ADOPTION

❑ Website Adoption

- ~38–40% of websites now support HTTP/3 (QUIC)
- Growth from:
  - ~22% (2022)
  - ~28% (2023)
  - ~34% (2024)
  - ~40%+ (2025–2026)

❑ Traffic Adoption

- ~20–30% of Internet traffic uses HTTP/3 (QUIC)
- Some datasets estimate ~40% of global web traffic via QUIC/HTTP3

❑ Browser Adoption

- QUIC supported by: Chrome, Edge, Firefox, Safari (default-enabled)
- Only ~11% of Chrome clients do not use QUIC

PERFORMANCE ON GOOGLE PROPERTIES

- **Faster page loading times**
  - 5% faster on average
  - 1 second faster for web search at 99th-percentile

- **Improved YouTube Quality of Experience**
  - 30% fewer rebuffers (video pauses)

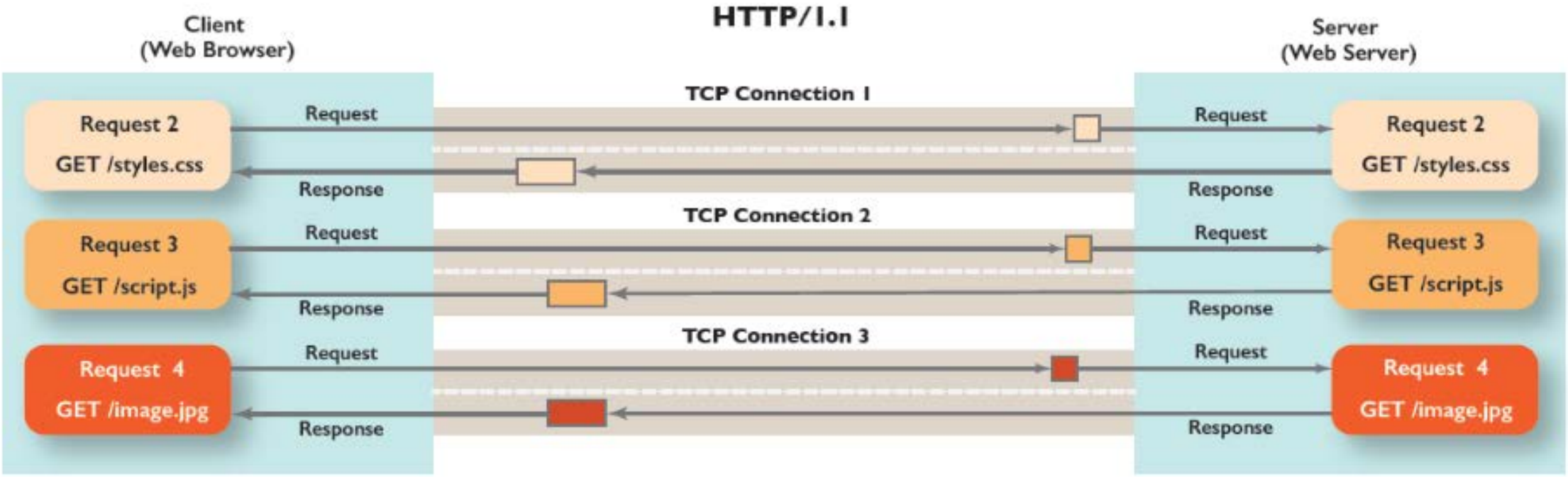
HTTP/1.1
Client
(Web Browser)
Server
(Web Server)
TCP Connection 1
TCP Connection 2
TCP Connection 3
Request 2
GET /styles.css
Request 3
GET /script.js
Request 4
GET /image.jpg
Request
Response

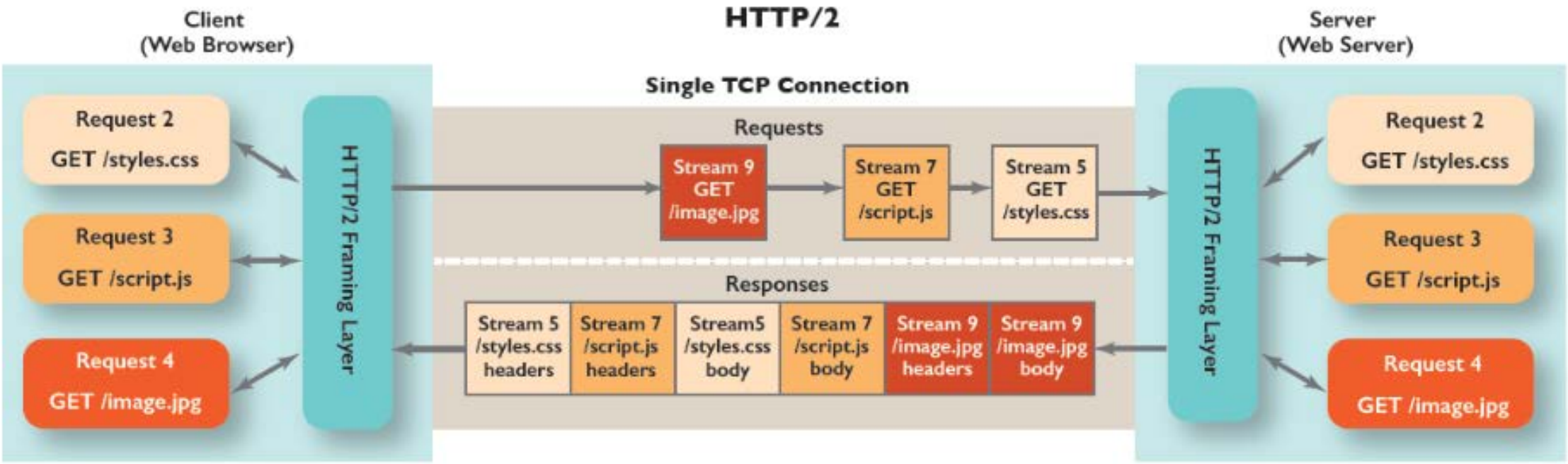
HTTP/2
Client
(Web Browser)
Server
(Web Server)
Single TCP Connection
Requests
Responses
Request 2
GET /styles.css
Request 3
GET /script.js
Request 4
GET /image.jpg
HTTP/2 Framing Layer
Stream 9 GET /image.jpg
Stream 7 GET /script.js
Stream 5 GET /styles.css
Stream 5 /styles.css headers
Stream 7 /script.js headers
Stream5 /styles.css body
Stream 7 /script.js body
Stream 9 /image.jpg headers
Stream 9 /image.jpg body

MESSAGE FROM DPO

"The information and data contained in the online learning modules, such as the content, audio/visual materials or artwork are considered the intellectual property of the author and shall be treated in accordance with the IP Policies of DLSU. They are considered confidential information and intended only for the person/s or entities to which they are addressed. They are not allowed to be disclosed, distributed, lifted, or in any way reproduced without the written consent of the author/owner of the intellectual property."